Force LED

96346008PE

THORN

[CZ] Montážní návod
[DE] Montageanleitung
[DK] Monteringsvejledning
[EE] Paigaldusjuhend
[FI] Asennusohje
[LT] Montavimo Instrukcijos
[LV] Instalacijas instrukcija
[FR] Notice de montage
[HU] Szerelési útmutató
[IT] Istuzioni di montaggio
[NO] Monteringsanvisning
[PL] Instrukcja montażu
[RU] Инструкция по монтажу
[SE] Installationsanvisning
[UK] Installation Instructions

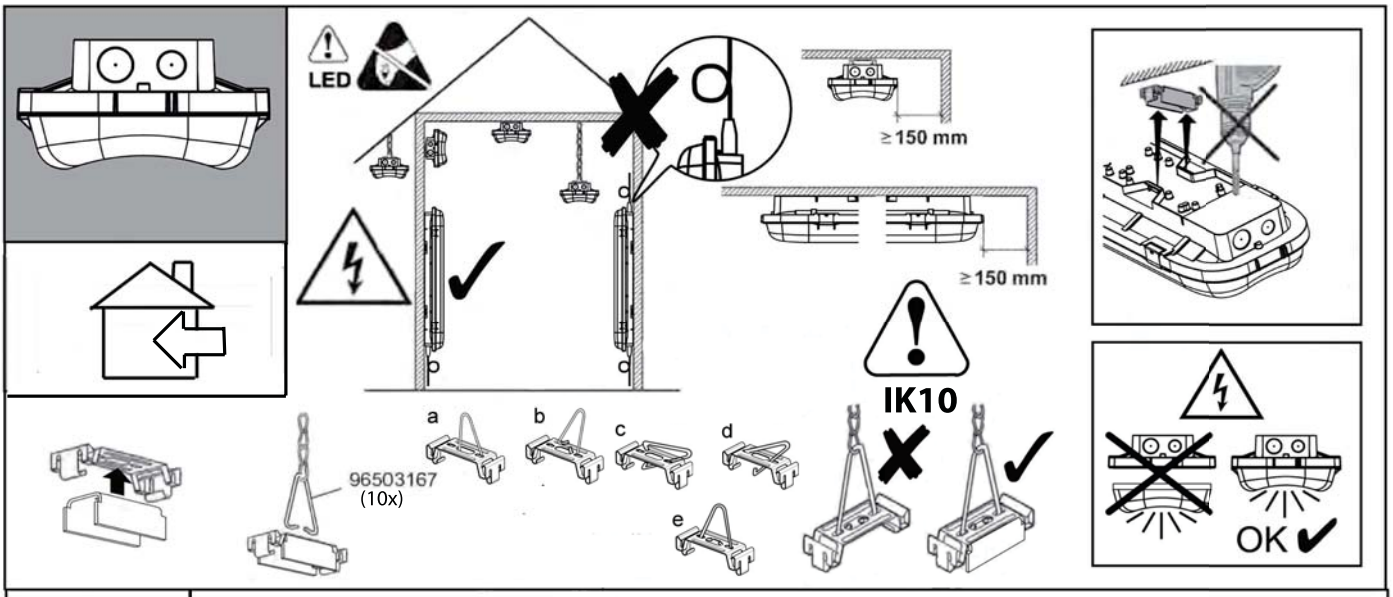

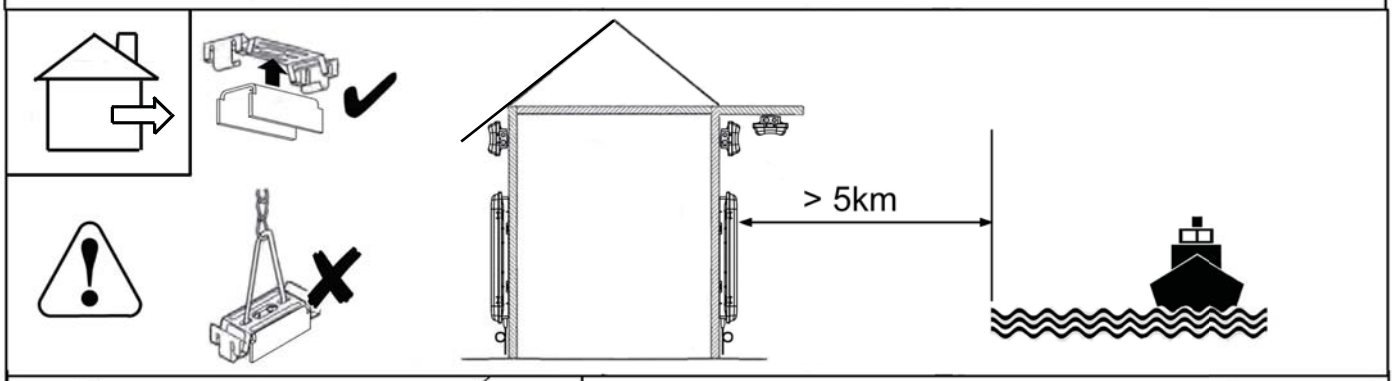

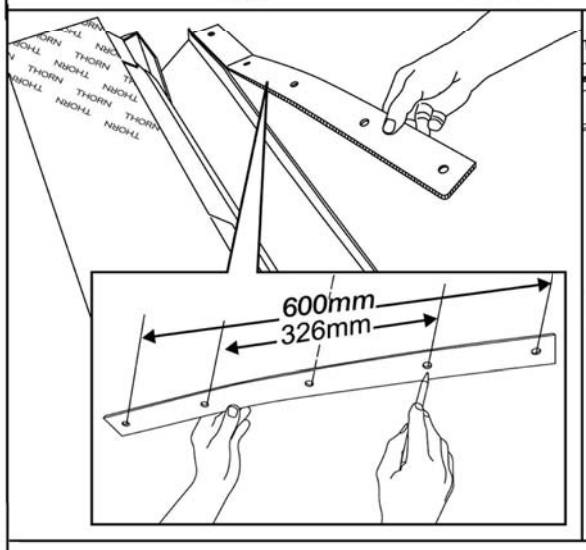

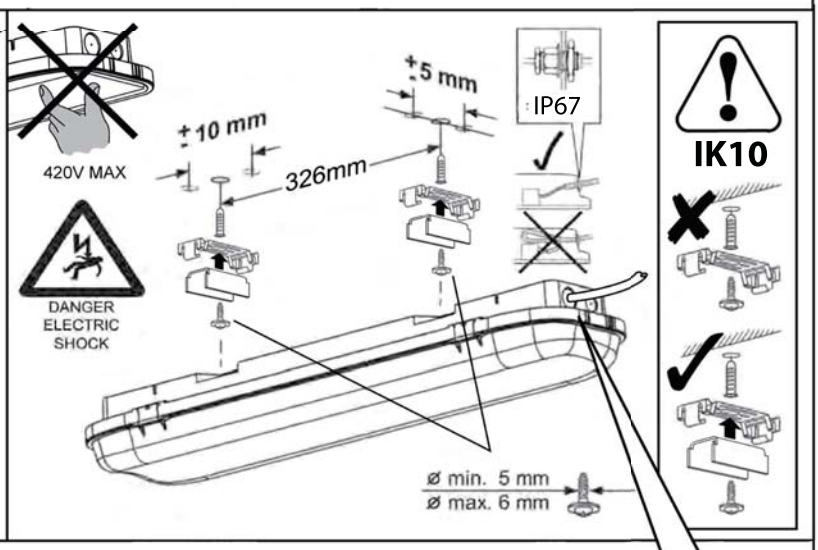

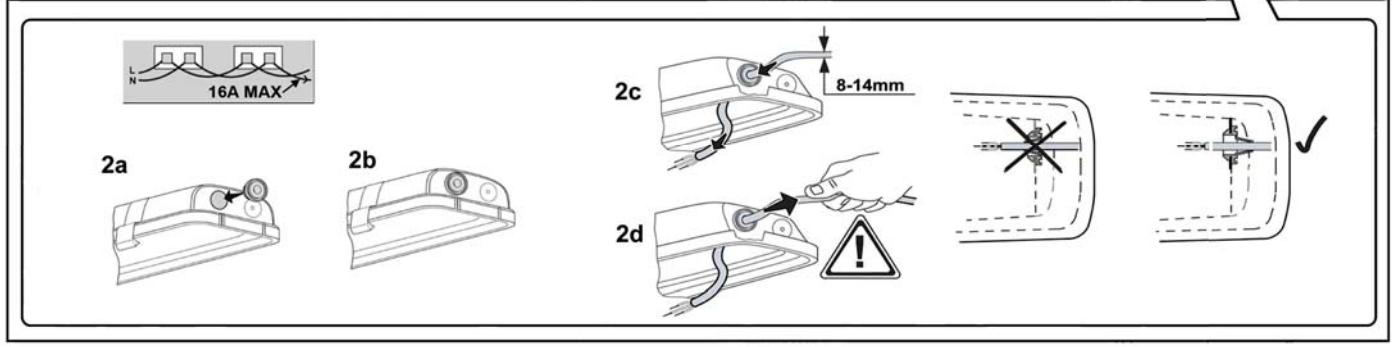

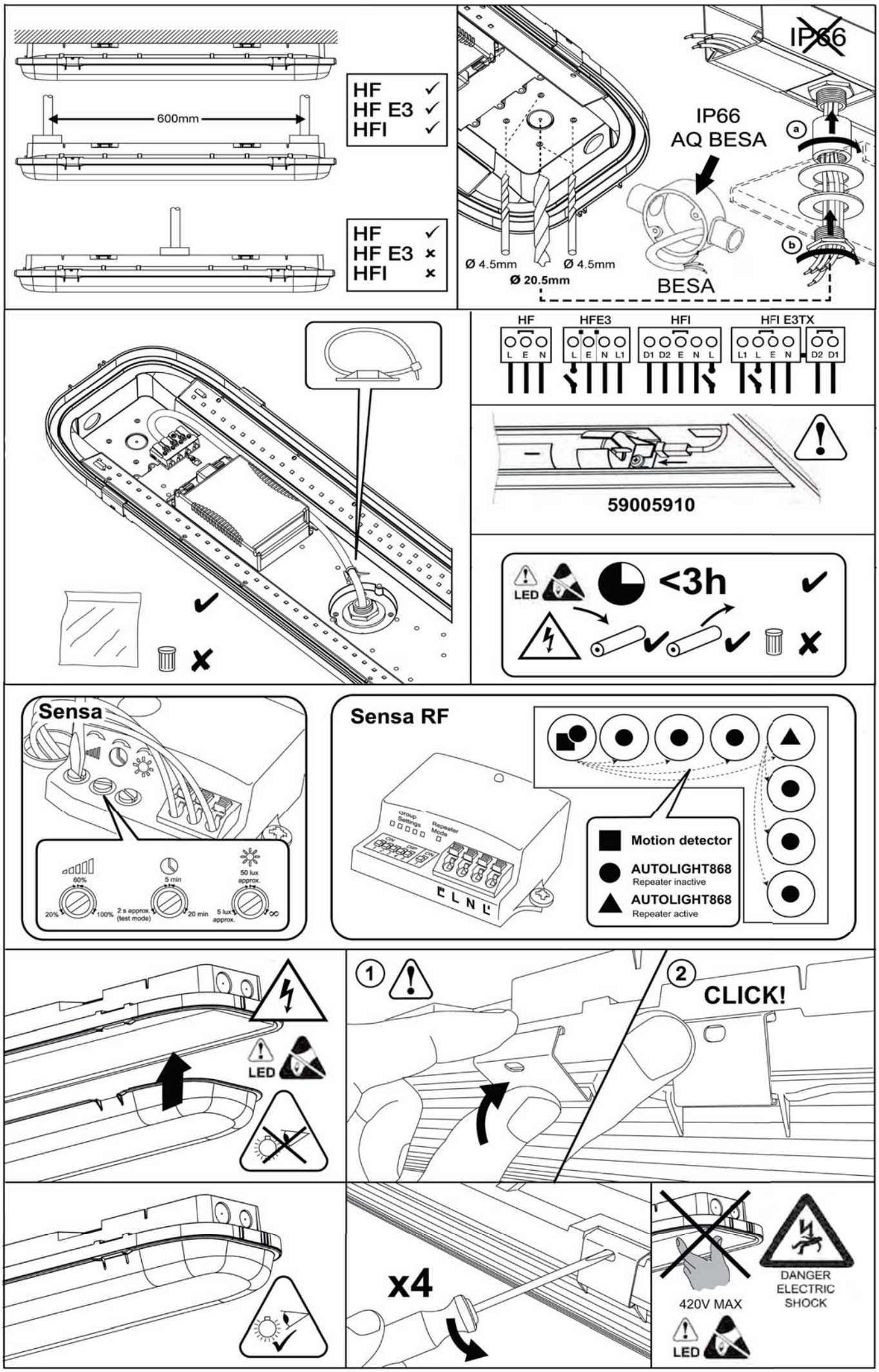
600mm
HF ✓
HF E3 ✓
HFI ✓
HF ✓
HF E3 ✗
HFI ✗
IP66
IP66
AQ BESA
BESA
Ø 4.5mm
Ø 4.5mm
Ø 20.5mm
a
b
HF
HFE3
HFI
HFI E3TX
L E N
L E N L1
D1 D2 E N L
L1 L E N
D2 D1
59005910
LED
<3h
Sensa
60%
20%
100%
5 min
2 s approx.
(test mode)
20 min
50 lux
approx.
5 lux
approx.
Sensa RF
Group Settings
Repeater Mode
ON
DIP
ON
L N L
Motion detector
AUTOLIGHT868
Repeater inactive
AUTOLIGHT868
Repeater active
LED
1
2
CLICK!
x4
420V MAX
DANGER
ELECTRIC
SHOCK
LED